MTECB345GAL-PE-52DIA

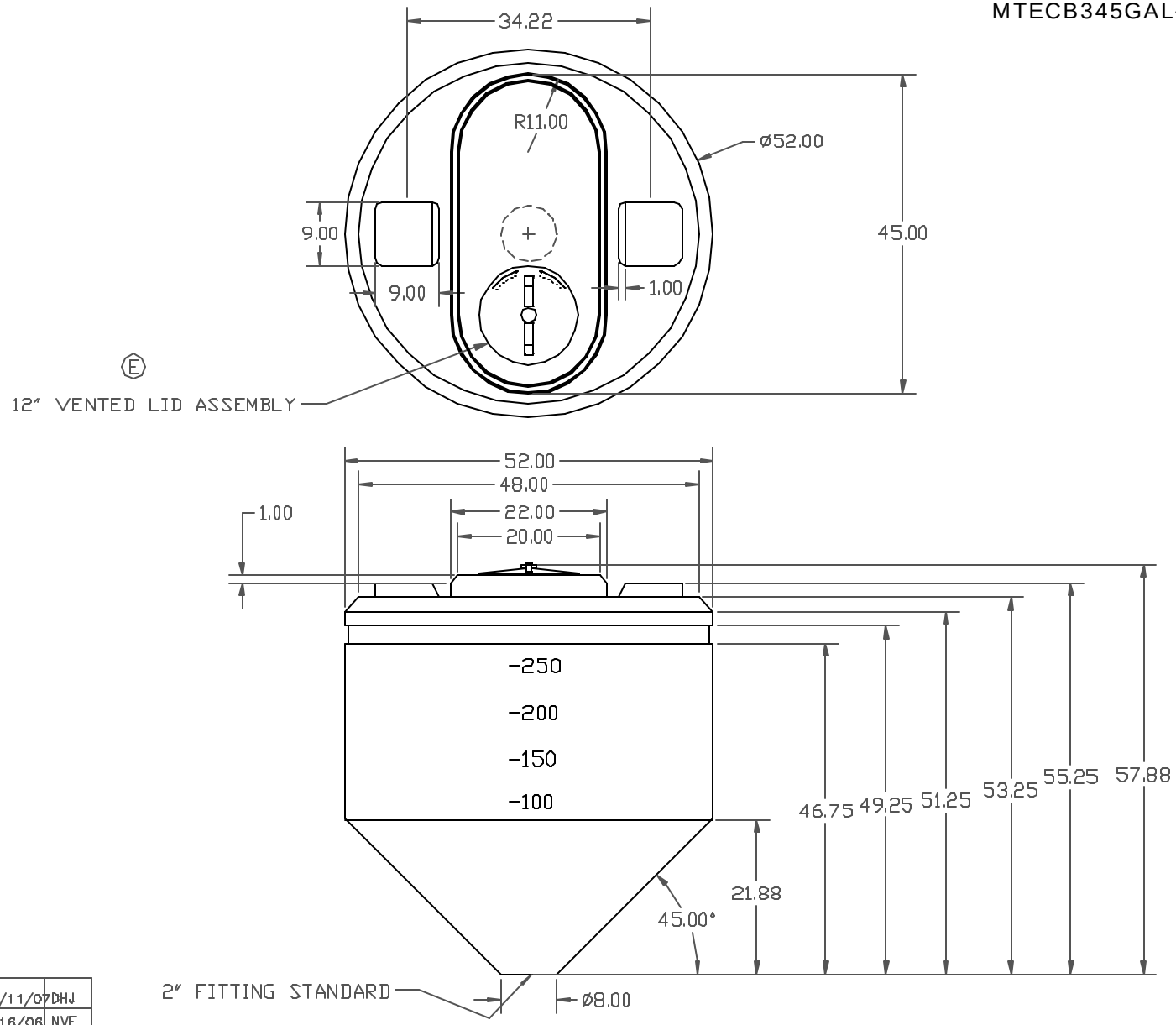


| REV | DESCRIPTION | DATE | APPRD |
|---|---|---|---|
| E | 16 INCH LID WAS SHOWN CCN1299 | 4/11/07 | DHJ |
| D | REMOVED STAND, UPDATED PRINT | 5/16/06 | NVE |
| C | CHANGE PART NO. TO CB0345-52 | 10/5/04 | |
| B | ADD FITTING INFORMATION | 10/05/04 | |
| A | FINALIZE PART | 9/15/04 | |

DRAWN / DATE
DHJ / 8/17/04

APPRD. / DATE
REH 4/18/07

MATERIAL

HDPE OR EQUIVALENT
REFERENCE MATERIAL DATA SHEET
FOR SPECIFIC PROPERTIES.

ALL DIMENSIONS ARE IN DECIMAL INCHES
TOLERANCES UNLESS OTHERWISE SPECIFIED
± 1% @ 68° F

THIRD ANGLE PROJECTION
ANSI 14.5M

NOTES:
1. NOM. WALL @ .250
2. SHOT WEIGHT 100 LBS.


CSI
ChemIndustrial Systems, Inc.
PO Box 500, Cedarburg, WI 53012
262-375-8570 • (Fax) 262-375-8559 • info@chemindustrial.com


SCALE N.S.

PART NO. MTECB345GAL-PE-52DIA